ActewAGL

ActewAGL House 40 Bunda Street ACT 2600 ■ GPO Box 366 Canberra ACT 2601
actewagl.com.au

Special connection request

Service and Installation Rules appendix A11

For enquiries please **phone 6293 5749** or **fax 6293 5750** and return this form by email to **networkservicing@actewagl.com.au**

All systems must be approved by ActewAGL and all relevant authorities prior to connection to the ActewAGL network.

Systems must comply with the ActewAGL Service and Installation Rules, ActewAGL Electricity Connection and Distribution Standard Customer contract, ActewAGL Renewable Energy Generator Connection contract, and ActewAGL Guidelines for Grid-Connected Photovoltaic Installations.

All charges are as per the ActewAGL Schedule of Electricity Network Charges as published by ActewAGL and available at actewagl.com.au

Work site address

Customer or business name

Unit number | Floor | Street number | Street name

Block | Section | Suburb | State | Postcode

System information

System nominal output Watts

Inverter details

Manufacturer | Model number

Direct current | Alternating current

Panel details

Manufacturer | Model number

Single line diagram of system attached Yes ☐ (see attachment)

Installer information

Contractor/installer | BSCE accreditation number

Business name | Licence number | Phone

Customer declaration

By signing below I declare and agree that:

☐ the information I have provided in this form is accurate and correct. If for any reason this information is incorrect, I will submit a new Special connection request form for approval by ActewAGL;

☐ I have read, understood, and accept the terms and conditions of the ActewAGL Renewable Energy Generator Connection contract.

Customer name (please print) | Signature | Date / /

Approved connections will default to your electricity supplier's buyback scheme. To receive benefits through the ACT Government's Electricity Feed-in Renewable Energy Generation scheme, an additional application is necessary. For more information, contact your electricity supplier or visit www.act.gov.au

(ActewAGL use only)

Received date / /

ActewAGL approval

Officer Name (please print) | Signature | Issue date / /

This approval will cease 90 days from the issue date unless a test certificate of installation is received from the licensed electrician.

Solar System Line Diagram

Please fill in the details of parts present in your system.

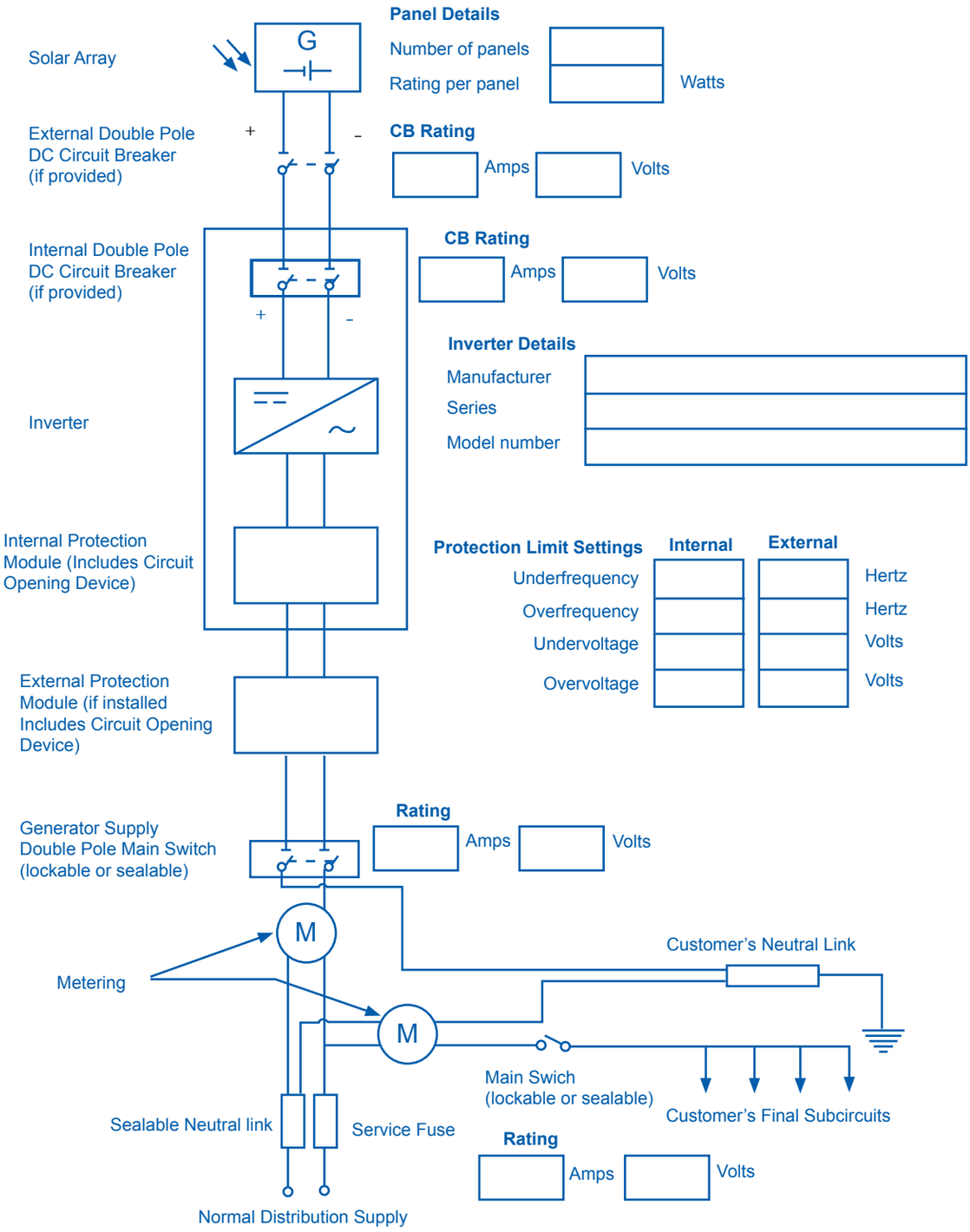

Comments